Temperature sensors - Temperature sensors - Remote/submersible probe

Selling points of the range

- Built-in converter : 0-10 V DC output
- Applications : Industrial and domestic

Part number characteristics	89 750 153
Range	-10 →+150 °C
Accuracy	-0.2 °C +1.2 °C
Protection casing	IP65
Protection probe	IP67
Product available	stocked item

General characteristics

Supply voltage	24 V DC (±10 %)
Output	0 →10 VDC
Temperature coefficients Derating	0.01 % / °C of full scale
Temperature coefficients Offset	1.5 mV / °C
Ambient temperature (°C)	-10 →+60
Ambient humidity	5 →95 % RH
Material housing	Self-extinguishing

Dimensions

89 750 153 and 89 750 155

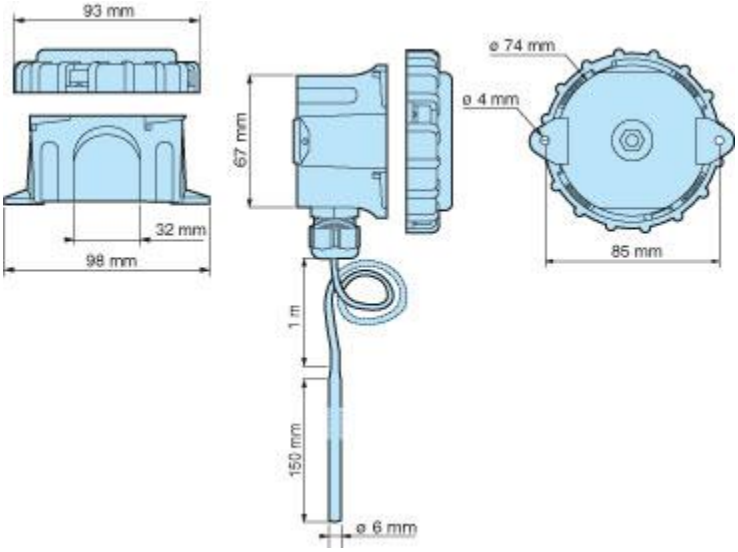

Zoom

Accessories for 89 750 153 and 89 750 155

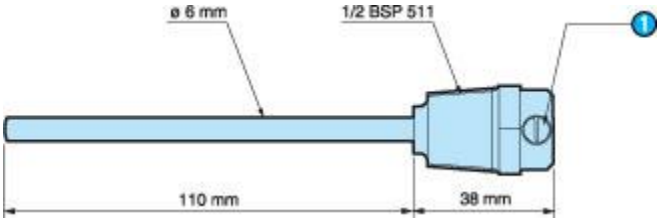

N°	Legend
1	Screw M4

Zoom

Accessories

Accessories	Operating temperature (°C)	Operating pressure (bar)	Code
Copper protective sleeve	-20 →+100	10	89 750 146
Stainless steel (316) protective sleeve	-20 →+400	16	89 750 147
Heat transfer compound	-	-	18 373 112